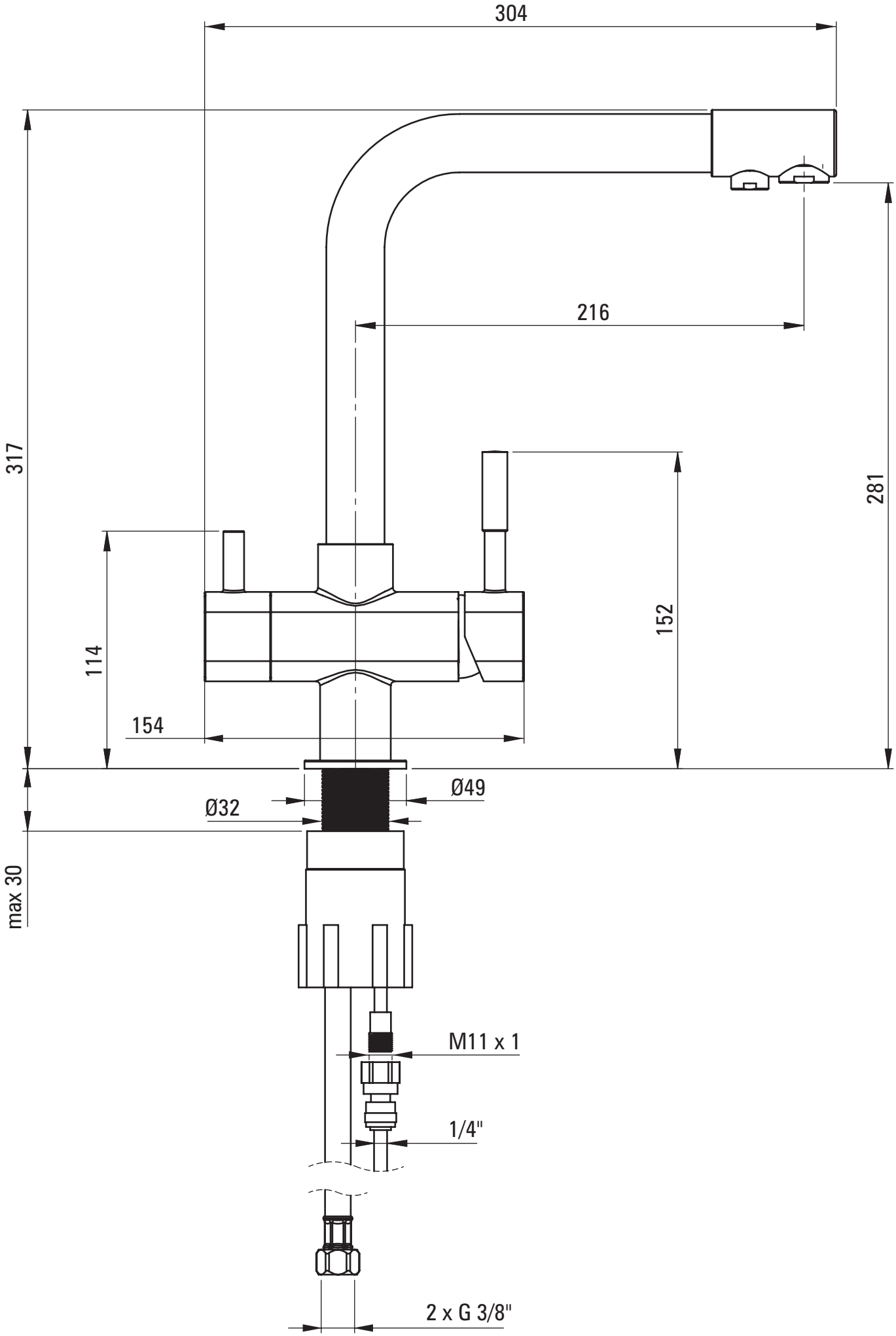
304
216
317
281
152
114
154
Ø49
Ø32
max 30
M11 x 1
1/4"
2 x G 3/8"