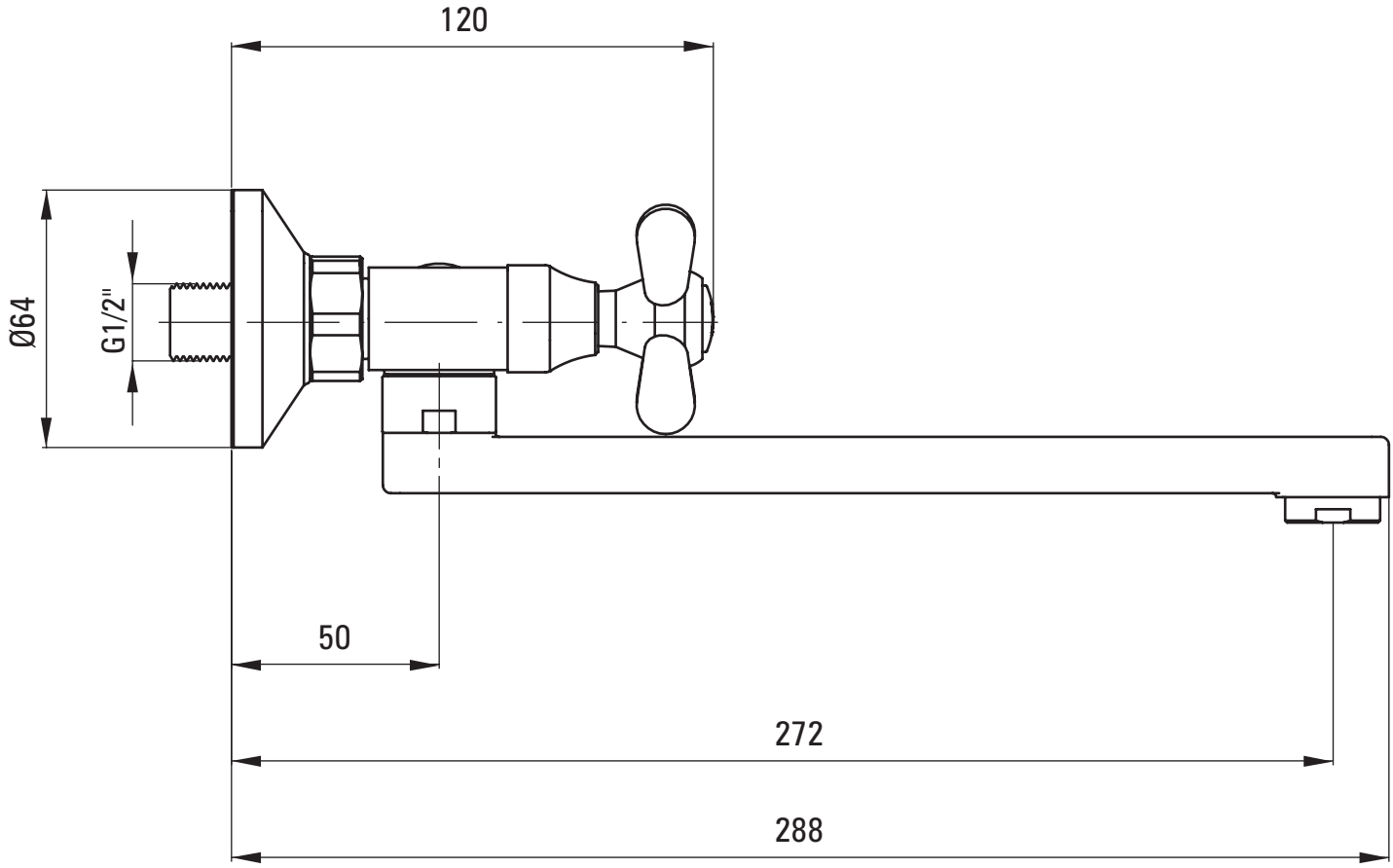
120
Ø64
G1/2"
50
272
288

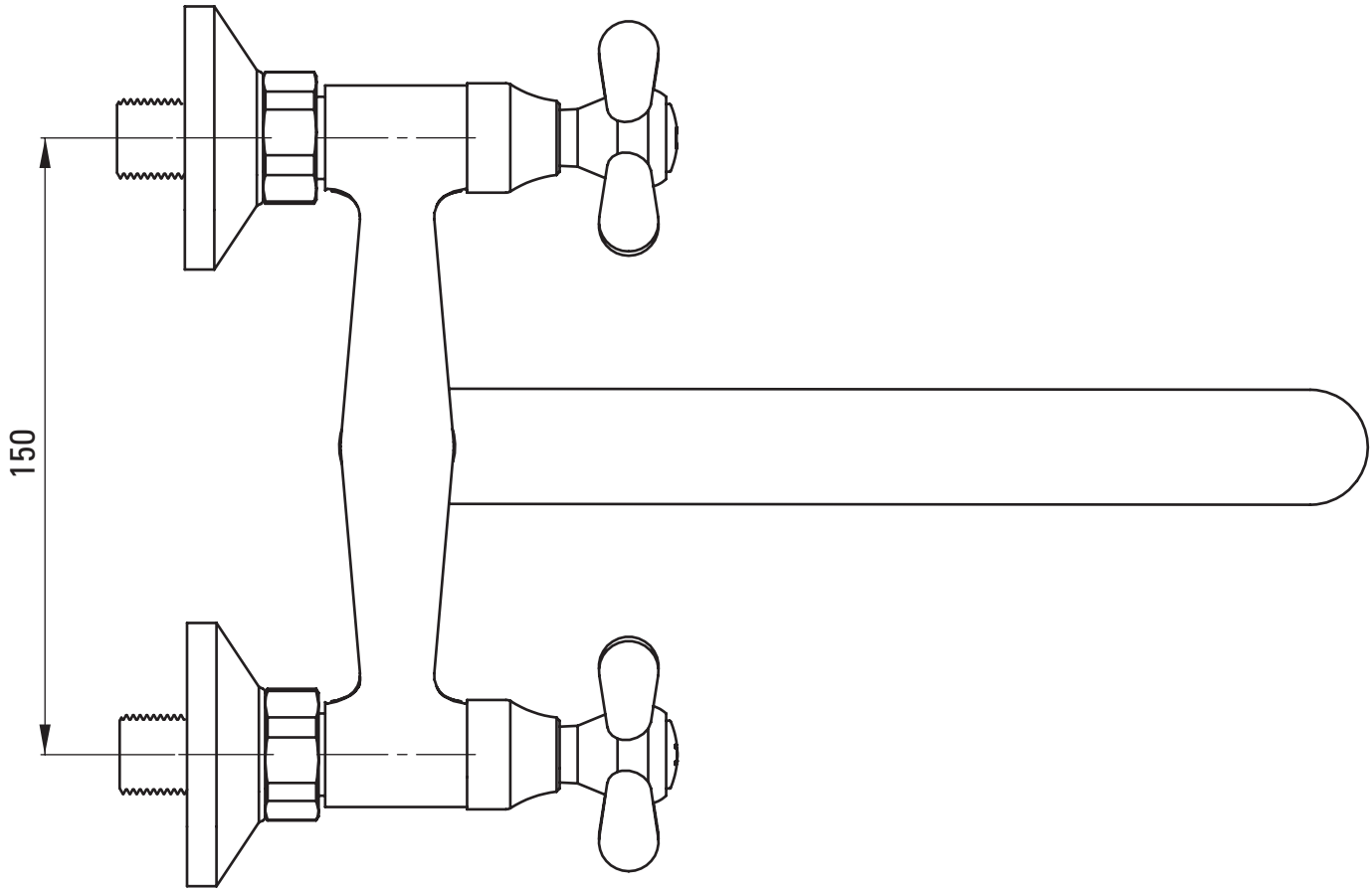
150