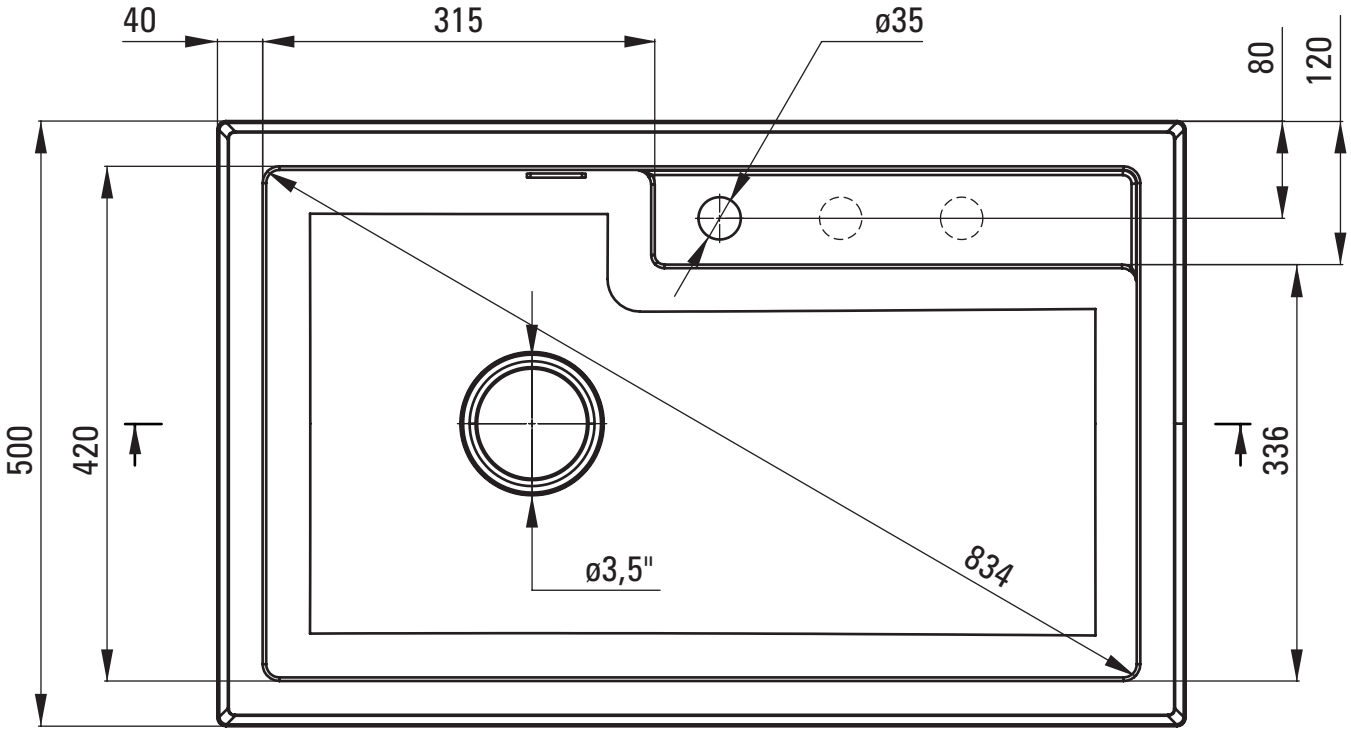
40
315
ø35
80
120
500
420
336
ø3,5"
834

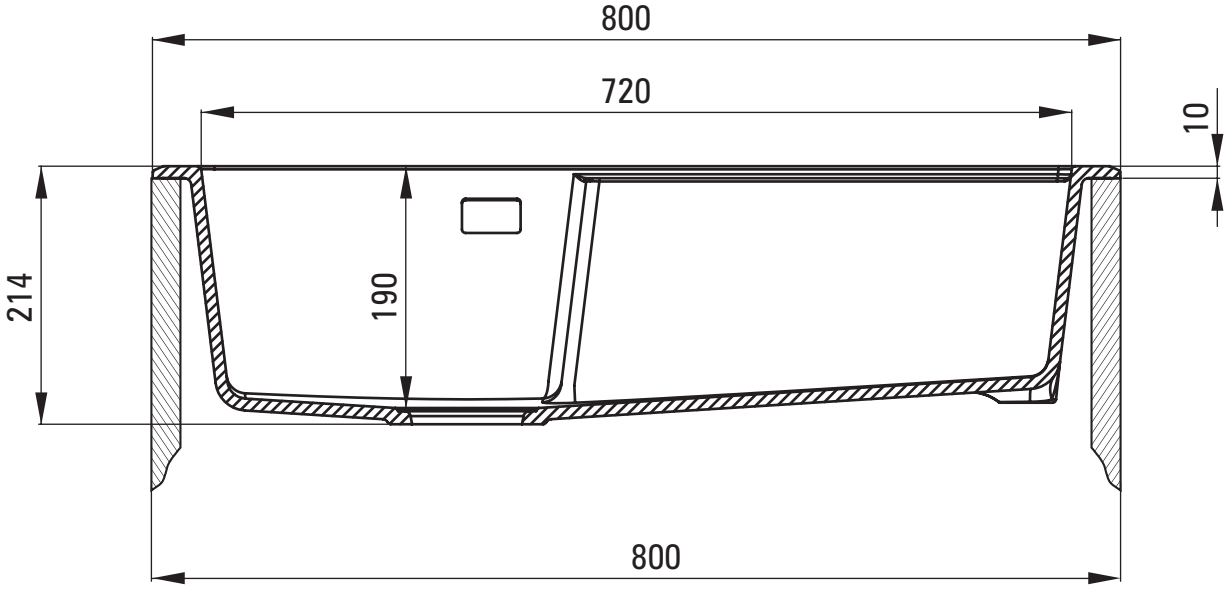
800
720
10
214
190
800