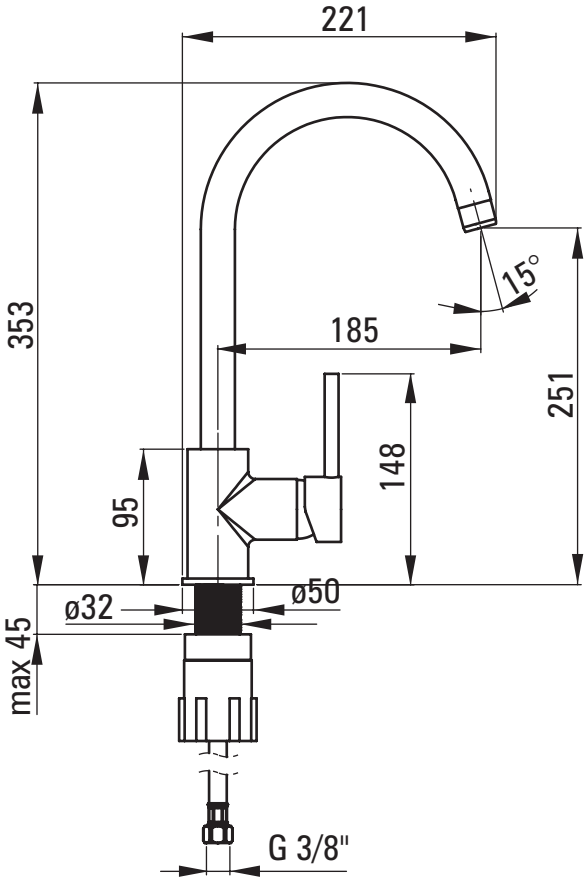
221
353
185
15°
251
148
95
ø32
ø50
max 45
G 3/8"

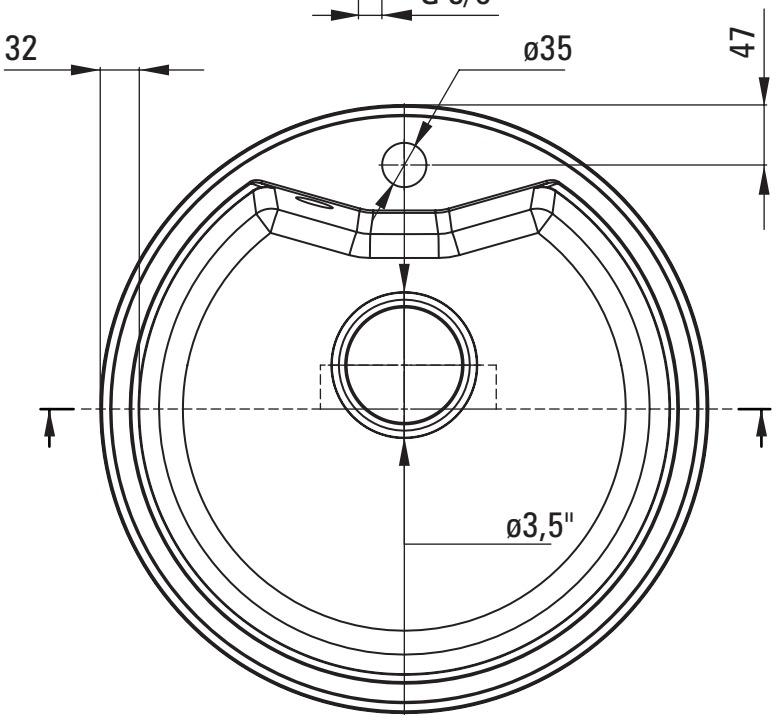
32
ø35
47
ø3,5"

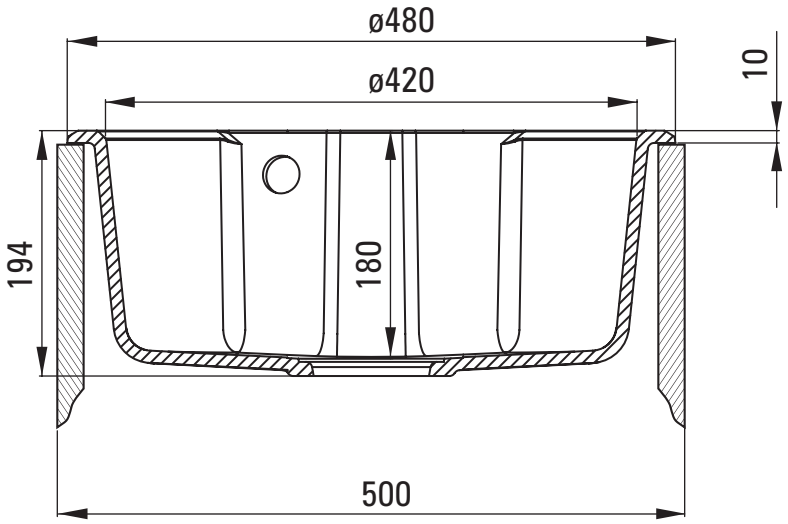
ø480
ø420
10
194
180
500